SCHWARZBECK MESS - ELEKTRONIK

An der Klinge 29 D-69250 Schönau Tel.: 06228/1001 Fax.: (49)6228/1003

VHF-UHF Balun / Halter UBAA 9114 mit Bikonuselementen BBUK 9139

VHF-UHF Balun / Holder UBAA 9114 with Biconical Elements BBUK 9139

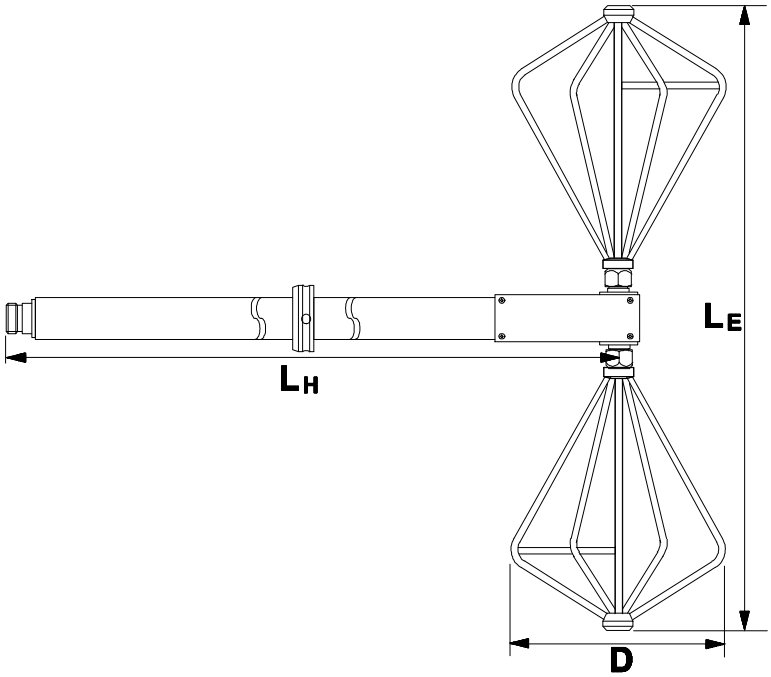

LE = 330 mm, D = 130 mm

Frequency	Distance	lambda	Attenuation	Gain(Isotr.)	Gain(Dipole)	Ant.-Factor
MHz	m	m	dB	dBi	dBd	dB/m
30.00	3.00	10.00	88.00	-38.24	-40.39	38.00
35.00	3.00	8.57	84.50	-35.82	-37.97	36.92
40.00	3.00	7.50	80.80	-33.39	-35.54	35.65
45.00	3.00	6.67	77.00	-30.98	-33.13	34.26
50.00	3.00	6.00	74.10	-29.07	-31.22	33.27
60.00	3.00	5.00	69.60	-26.03	-28.18	31.81
70.00	3.00	4.29	66.12	-23.62	-25.77	30.74
80.00	3.00	3.75	62.70	-21.33	-23.48	29.61
90.00	3.00	3.33	61.20	-20.06	-22.22	29.37
100.00	3.00	3.00	57.60	-17.81	-19.96	28.03
110.00	3.00	2.73	55.50	-16.34	-18.49	27.39
120.00	3.00	2.50	54.00	-15.21	-17.37	27.02
130.00	3.00	2.31	51.90	-13.82	-15.97	26.32
140.00	3.00	2.14	50.10	-12.60	-14.75	25.74
150.00	3.00	2.00	48.60	-11.55	-13.70	25.29
160.00	3.00	1.88	47.40	-10.67	-12.82	24.97
170.00	3.00	1.76	46.36	-9.88	-12.03	24.71
180.00	3.00	1.67	45.12	-9.01	-11.16	24.34
190.00	3.00	1.58	44.44	-8.44	-10.59	24.23
200.00	3.00	1.50	43.70	-7.85	-10.00	24.09
Frequency	Distance	lambda	Attenuation	Gain(Isotr.)	Gain(Dipole)	Ant.-Factor
MHz	m	m	dB	dBi	dBd	dB/m

SCHWARZBECK MESS - ELEKTRONIK

An der Klinge 29 D-69250 Schönau Tel.: 06228/1001 Fax.: (49)6228/1003

VHF-UHF Balun / Halter UBAA 9114 mit Bikonuselementen BBUK 9139

VHF-UHF Balun / Holder UBAA 9114 with Biconical Elements BBUK 9139

Frequency	Distance	lambda	Attenuation	Gain(Isotr.)	Gain(Dipole)	Ant.-Factor
MHz	m	m	dB	dBi	dBd	dB/m
210.00	3.00	1.43	43.00	-7.28	-9.44	23.95
220.00	3.00	1.36	42.34	-6.75	-8.90	23.82
230.00	3.00	1.30	41.40	-6.09	-8.24	23.54
240.00	3.00	1.25	40.90	-5.65	-7.81	23.48
250.00	3.00	1.20	40.35	-5.20	-7.35	23.38
260.00	3.00	1.15	39.20	-4.46	-6.61	22.98
270.00	3.00	1.11	38.70	-4.04	-6.19	22.89
280.00	3.00	1.07	38.10	-3.58	-5.74	22.75
290.00	3.00	1.03	37.10	-2.93	-5.08	22.40
300.00	3.00	1.00	36.50	-2.49	-4.64	22.25
325.00	3.00	0.92	35.30	-1.54	-3.69	22.00
350.00	3.00	0.86	34.40	-0.77	-2.92	21.87
375.00	3.00	0.80	33.60	-0.07	-2.22	21.77
400.00	3.00	0.75	33.15	0.44	-1.71	21.82
425.00	3.00	0.71	33.20	0.68	-1.47	22.11
450.00	3.00	0.67	33.50	0.78	-1.38	22.51
475.00	3.00	0.63	34.20	0.66	-1.49	23.09
500.00	3.00	0.60	35.50	0.23	-1.92	23.97
525.00	3.00	0.57	37.20	-0.40	-2.56	25.03
550.00	3.00	0.55	38.50	-0.85	-3.00	25.88
575.00	3.00	0.52	40.20	-1.51	-3.66	26.92
600.00	3.00	0.50	41.70	-2.07	-4.23	27.86
625.00	3.00	0.48	42.50	-2.30	-4.45	28.44
650.00	3.00	0.46	44.30	-3.03	-5.18	29.51
675.00	3.00	0.44	45.54	-3.48	-5.63	30.29
700.00	3.00	0.43	47.20	-4.16	-6.31	31.28
725.00	3.00	0.41	48.20	-4.50	-6.65	31.93
750.00	3.00	0.40	48.60	-4.56	-6.71	32.28
775.00	3.00	0.39	49.80	-5.01	-7.16	33.02
800.00	3.00	0.38	50.20	-5.08	-7.23	33.36
825.00	3.00	0.36	51.00	-5.34	-7.49	33.89
850.00	3.00	0.35	51.90	-5.66	-7.81	34.47
875.00	3.00	0.34	52.60	-5.89	-8.04	34.95
900.00	3.00	0.33	52.90	-5.91	-8.06	35.22
925.00	3.00	0.32	52.80	-5.75	-7.90	35.29
950.00	3.00	0.32	52.90	-5.68	-7.83	35.45
975.00	3.00	0.31	52.90	-5.57	-7.72	35.57
1000.00	3.00	0.30	53.80	-5.91	-8.06	36.13
1050.00	3.00	0.29	54.20	-5.89	-8.05	36.54
1100.00	3.00	0.27	53.30	-5.24	-7.39	36.29
1150.00	3.00	0.26	54.50	-5.65	-7.80	37.08
1200.00	3.00	0.25	55.30	-5.86	-8.02	37.67
Frequency	Distance	lambda	Attenuation	Gain(Isotr.)	Gain(Dipole)	Ant.-Factor
MHz	m	m	dB	dBi	dBd	dB/m

SCHWARZBECK MESS - ELEKTRONIK

An der Klinge 29 D-69250 Schönau Tel.: 06228/1001 Fax.: (49)6228/1003

VHF-UHF Balun / Halter UBAA 9114 mit Bikonuselementen BBUK 9139

VHF-UHF Balun / Holder UBAA 9114 with Biconical Elements BBUK 9139

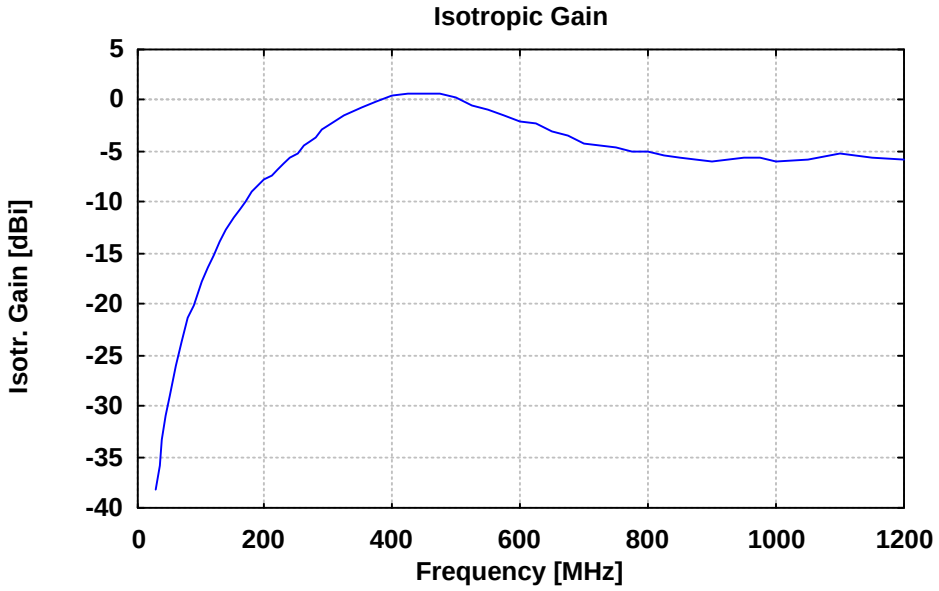

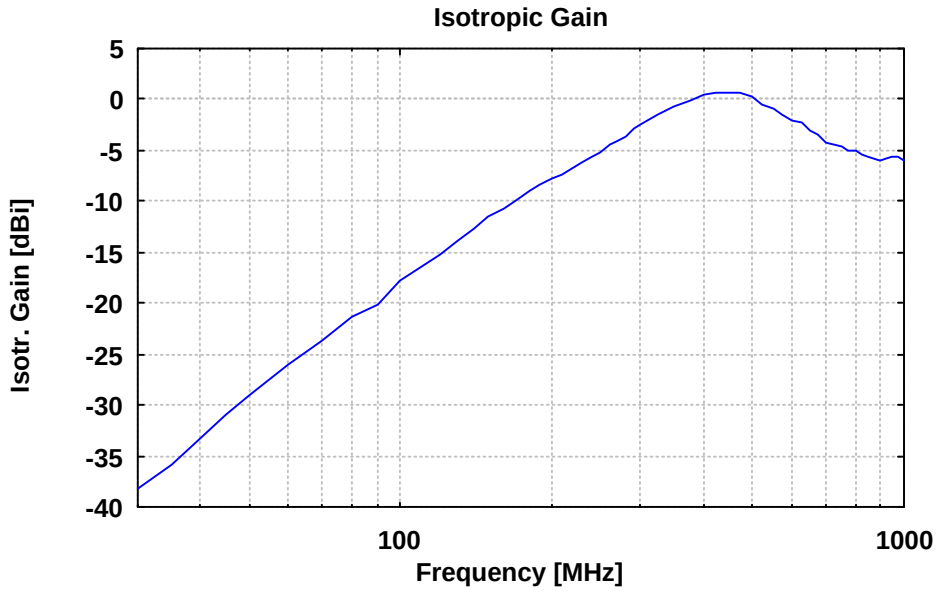

Kleine Bikonus-Messantenne UBAA 9114 mit 33 cm Elementen BBUK 9139, Isotropgewinn 30 MHz - 1,2 GHz, max. 5 W

Small Bicone Test Antenna UBAA 9114 with 33 cm Elements BBUK 9139, Isotropic Gain, 30 MHz--1.2 GHz, max. 5 Watt

SCHWARZBECK MESS - ELEKTRONIK

An der Klinge 29 D-69250 Schönau Tel.: 06228/1001 Fax.: (49)6228/1003

VHF-UHF Balun / Halter UBAA 9114 mit Bikonuselementen BBUK 9139

VHF-UHF Balun / Holder UBAA 9114 with Biconical Elements BBUK 9139

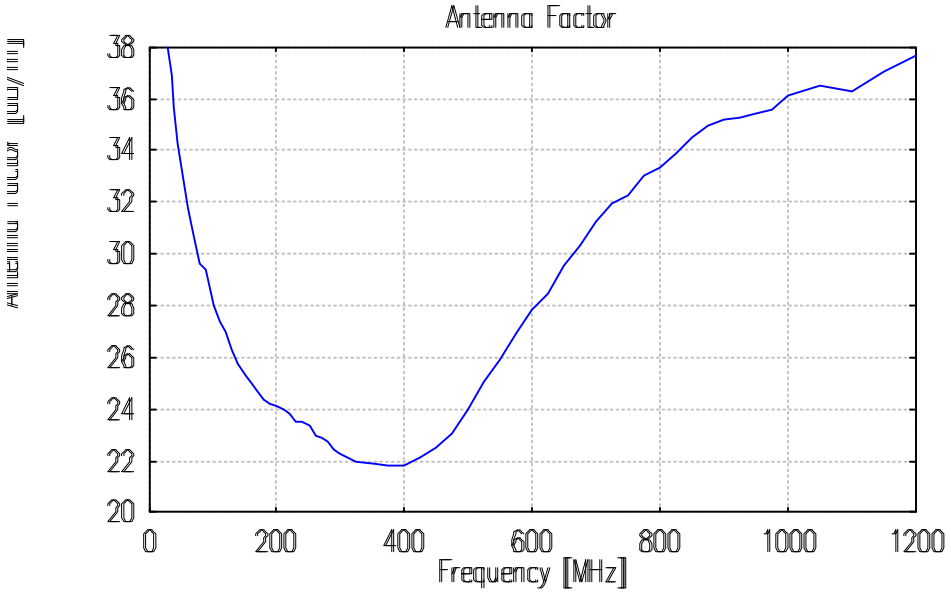

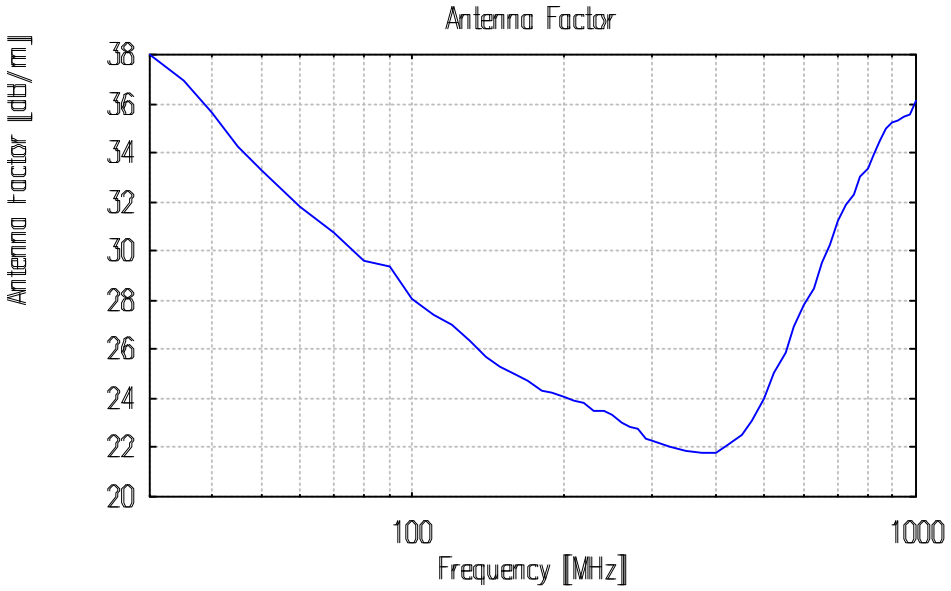

Kleine Bikonus-Messantenne UBAA 9114 mit 33 cm Elementen BBUK 9139, Antennenwandlungsmass (Lin f & Log f)

Small Biconical Test Antenna UBAA 9114 with 33 cm Elements BBUK 9139, Antenna Factors 30 MHz -- 1.2 GHz, max.5 W